EXP. No.: 03
DATE: 10/02/26
PG. NO.: 13

DESIGN OF WEIN BRIDGE OSCILLATOR

AIM:

To design a Wein-Bridge oscillator, simulator it in LTSpice to verify frequency of oscillation, and implement it on a breadboard to confirm waveform generation.

SOFTWARE REQUIRED:

- LTSpice Simulator.

DESIGN:

Given Data:

$V_{CC} = 12V$; $V_{BE} = 0.7V$; $f = 50Hz$; $I_C = 2mA$;

$h_{fe} = 100$.

Assume for proper amplification,

Consider V_{CC}:-

Step 1:

$$V_{CE} = \frac{V_{CC}}{2} = \frac{12V}{2} = 6V.$$

$$V_E = \frac{V_{CC}}{10} = \frac{12V}{10} = 1.2V.$$

Step 2: To find R_E AND R_C.

Apply KVL to the output loop:

CIRCUIT DIAGRAM:

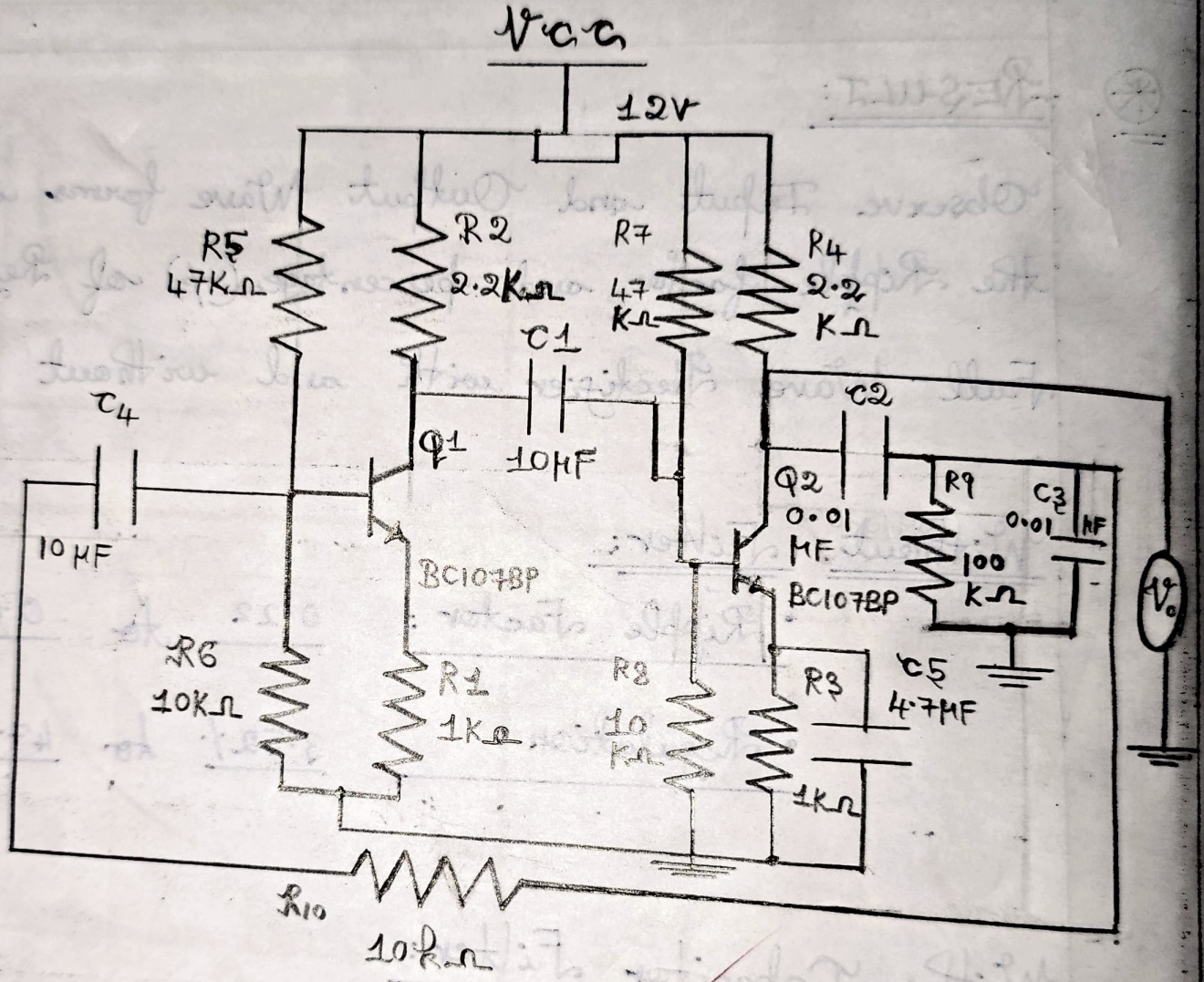

$$V_{CC} - I_C \cdot R_C - V_{CE} - I_E \cdot R_E = 0$$

$$V_{CC} - V_{CE} = I_C R_C + I_E R_E$$

Since, $I_C \approx I_E$

$$I_C \cdot R_C + I_C \cdot R_E = V_{CC} - V_{CE}$$

$$I_C \cdot [R_C + R_E] = V_{CC} - V_{CE}$$

$$R_C + R_E = \frac{V_{CC} - V_{CE}}{I_C} = \frac{12-6}{2 \times 10^{-3}} = \underline{3\,K\Omega}.$$

$$V_E \approx I_E \cdot R_E$$

$$R_E = \frac{V_E}{I_E} = \frac{1.2\,V}{2 \times 10^{-3}\,A} = 0.6 \times 10^3 = 600\,\Omega = \underline{1\,K\Omega}.$$

$$R_C + R_E \approx 3\,K\Omega.$$

$$R_C \approx 3\,K\Omega - 0.6\,K\Omega = 2.4\,K\Omega \approx \underline{2.2\,K\Omega}.$$

Step 3: To find R_1 and R_2:

$$h_{fe} = \frac{I_C}{I_B}$$

$$I_B = \frac{I_C}{h_{fe}} = \frac{2 \times 10^{-3}}{100} = \underline{2 \times 10^{-5}\,A}.$$

According to voltage divider rule,

(For Silicon transistor, $V_{BE} = 0.7\,V$).

⊛: MODEL GRAPH:

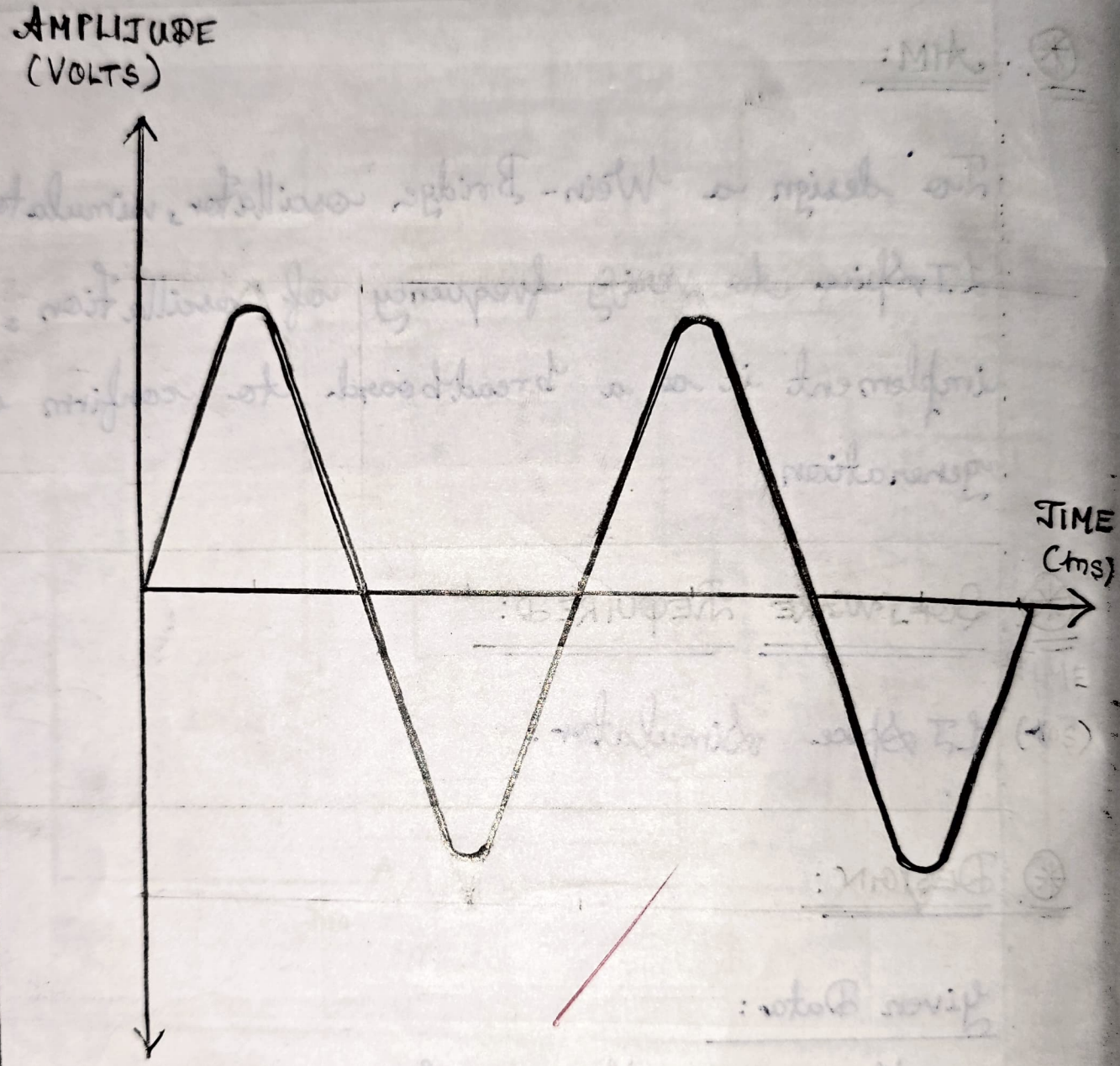

$V_{CC} = V_{R1} + V_{R2}$

$V_{R2} = V_{BE} + V_E$

$V_{R2} = 0.7V + 1.2V = \underline{1.9V.}$

$V_{R1} = V_{CC} - V_{R2}$

$V_{R1} = 12 - 1.9 = \underline{10.1V.}$

$R_1 = \frac{V_{R1}}{IR} = \frac{10.1}{10.I_B} = \frac{10.1}{10 \times 2 \times 10^{-5}} = 5.05 \times 10^4 = 50.5 \times 10^3 \approx \underline{47K\Omega.}$

$R_2 = \frac{V_{R2}}{IR} = \frac{1.9}{9.I_B} \approx \frac{1.9}{9 \times 2 \times 10^{-5}} = 0.105 \times 10^5 = 10.5 \times 10^3 \approx \underline{10K\Omega.}$

To avoid the overloading in the circuits, $IR_1 = 10.I_B$ and $IR_2 = 9.I_B$.

Step 4: To find capacitances (C_E and C_c).

By Pass Capacitance (C_E):

$X_{CE} = \frac{R_E}{10} = \frac{600}{10} = \underline{60.}$

Where,

$X_{CE} = \frac{1}{2\pi F C_E} = \underline{60.}$

$C_E = \frac{1}{2 \times 3.14 \times 50 \times 60} \approx 53.07\mu F \approx 47\mu F \approx \underline{100\mu F.}$

⊛. TABULATION:

S. No.	AMPLITUDE	TIME PERIOD	[P.F] PRACTICAL FREQUENCY	THEORETICAL FREQUENCY
1.	2.1	0.64	1562	1591
2.	2.2	0.63	1587	1591
3.	2.3	0.62	1613	1591
4.	2.2	0.64	1562	1591
5.	2.4	0.61	1639	1591
6.	2.3	0.63	1587	1591
7.	2.5	0.60	1666	1591
8.	2.4	0.62	1613	1591
9.	2.3	0.63	1587	1591
10.	2.2	0.64	1562	1591

⊛. CALCULATION:

i). PRACTICAL FREQUENCY:

→ $f = \frac{1}{T}$

→ Eg: (Row 1):

$$f = \frac{1}{0.64 \times 10^{-3}} = 1562 \text{ Hz.}$$

EXP. No. : 03
DATE : 10/02/26
Pg. No. : 16

⊛ PROCEDURE:

1. Connections are given as shown in the circuit diagram.

2. Observe the O/P voltage (V_o), time period (t) from the C.R.O.

3. Calculate the theoretical frequency:

$$f = \frac{1}{2\pi RC}$$

4. Calculate the practical frequency by using Step 2.

$$f = \frac{1}{T}$$

5. Plot the graph between O/P voltage (V_o), and time period (t).

6. Compare the practical frequency with the theoretical frequency, which are approximately equal.

⊛. DESIGN:

No.: 03
: 10/02/26
o.: 17

Coupling Capacitance (C_c):

$$X_{cc} = \frac{R_c}{10} = \frac{2\times10^3}{10} = \underline{200.}$$

$$X_{cc} = \frac{1}{2\pi F C_c}.$$

$$C_c = \frac{1}{2\times3.14\times50\times200} = 1.59\times10^{-5} = 15.9\times10^{-6} \approx \underline{4.7\mu F.}$$

OSCILLATOR DESIGN:

$$\boxed{f = \frac{1}{2\pi RC}}$$

Assume : $f = 1kHz$; $C = 0.01\mu F$.
$R = 159K\Omega$ (R is approximated to $100K\Omega$).

Therefore, $\underline{R = 100K\Omega.}$

RESULT:

Thus, the Wein-Bridge Oscillator was designed and simulated using LTSpice and constructed for the given cut-off frequency.

- Theoretical frequency = 1591 Hz.
- Practical frequency = (1560 - 1660) Hz.